

THIRD FLOOR

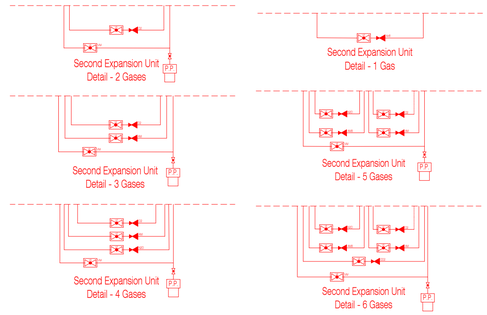

LEGEND

- Oxygen intake (O2)
- Medical Air Intake 4 Bar (AM4)
- Medical Vacuum Intake (VM)
- Nitrous Oxide Intake (N2O)
- Carbon dioxide intake (CO2)
- Medical Air Intake 8 Bar (AM8)
- Source Valve
- Loop Valve
- Zone Valve
- Police Valve
- Maintenance Valve
- PP Visible Level–Drain Pote
- USD Second Expansion Unit N Gas
- RA Alarm reporting
- BA Alarm box
- Regulator for: O2, N2O, AM, AM8,CO2
- FM — Grouped Medical Gases Pipelines(FM)
- Medical Oxygen Pipeline (O2)
- Medical Vacuum Pipeline (VM)
- AM — Compressed Medical air Pipeline (AM)
- AM8 — Compressed Air Pipeline 8 bars (AM8)
- N2O — Medical Nitrous Oxide Pipeline (N2O)
- CO2 — Carbon Dioxide Pipeline (CO2)

UNITED REPUBLIC OF TANZANIA

THE REVOLUTIONARY GOVERNMENT OF ZANZIBAR

MINISTRY OF HEALTH

PROJECT IMPLEMENTATION UNIT

Kuwait Fund for Arab Economic Development (KFAED)

Saudi Fund for Development (SFD)

Arab Bank for Economic Development in Africa (BADEA)

CONSULTANT J.V. :

AI-ABDULHADI ENGINEERING CONSULTANCY

AEC (KUWAIT)

&

APEX (TANZANIA)

CONSULTANCY SERVICES FOR DESIGN AND SUPERVISION OF WORKS FOR THE REHABILITATION AND EXPANSION OF MNAZI MMOJA HOSPITAL

DETAILED DESIGN

MEDICAL GASES
THIRD FLOOR

Drawing No.	Rev.	Date	Description	Scale :
EQ-03	A	Nov. 2023		1/200